International Journal of Innovative Technology and Exploring Engineering (IJITEE)
ISSN: 2278-3075 (Online), Volume-13 Issue-9, August 2024

Profibus DP

Kacper Falkiewicz

Abstract*: *The article contains information related to the Profibus DP communication protocol. The article will discuss the basic protocols used in industrial networks and an example application of the Profibus protocol. It will then discuss the Profi-bus network, the principles of the protocol, and the description and configuration of a workstation configured according to the Profibus DP standard. The task uses a Siemens S7-1200 family controller operating in master mode, a VIPA DI/DO island operating in slave mode, and a light sensor as a measuring element.

Keywords*: *Communication Protocol, PLC, Profibus DP, Siemens

I. INTRODUCTION

Profibus is a protocol created by SIEMENS AG, it allows communication between ET 200 I/O devices and the exchange of information with display and operator panels along with other field devices [1] [5]. The main focus of this technology is to support the needs of the process industry therefore it is most commonly used in establishments that place high emphasis on product safety control.

Profibus is an industrial fieldbus that enables communication between automation devices, based on the IEC 61158 and IEC 61784 standards [6]. It is a complex communication protocol that operates on the 3 layers of the ISO/OSI model. The specific layers utilized by the Profibus network are as follows:

- Physical layer: determines the maximum network size and is responsible for data transmission speed.
- Data link layer: determines message size and location within the network.
- Application layer: an optional layer in the Profibus network that handles data delivery to the user and facilitates the handling of specific data.

The network's primary responsibility is to transmit large amounts of data efficiently in the shortest possible time. The communication protocol relies on profiles that define network properties. These profiles contain device and system-specific properties, parameters, and behaviors. Profibus DP is the most commonly used protocol variant, designed to be faster and simpler to use than its predecessor.

Manuscript received on 03 July 2024 | Revised Manuscript received on 15 July 2024 | Manuscript Accepted on 15 August 2024 | Manuscript published on 30 August 2024.
***** Correspondence Author
Kacper Falkiewicz*, Faculty of Electrical Engineering, Gdynia Maritime University, Gdynia, Poland: 48088@student.umg.edu.pl, ORCID ID: 0009-0003-9175-2792

Fig. 1. Official Profibus Protocol Logo

The Profibus DP system facilitates communication between PLC controllers and a variety of peripheral devices [2] [4] [10] [11]. In Master-Slave mode, the primary transmitter cyclically exchanges data with subordinate receivers. RS-485 interface is the most widely used transmission technology for communication in the Profibus DP standard. It offers transmission speeds ranging from 9.6 kbit/s to 12 Mbit/s.

The protocol functions by passing tokens between master devices, thus creating a logical token ring between master transmitters. Slave receivers cannot generate or send requests but only respond to signals received from the master.

The Profibus DP protocol is divided into three layers that define its functionality. These layers include:

- DP-V0 allows for cyclic data exchange and network diagnostics.
- DP-V1 enables both cyclic and acyclic data exchange between Master and Slave devices.
- DP-V2 supports communication in isochronous slave-to-slave mode, which facilitates communication with a synchronized clock and message transmission without requiring confirmation from stations on the network.

In the Profibus network, messages are composed of 11-bit characters comprising 1 start bit, 8 data bits, 1 parity bit, and 1 stop bit. These characters are transmitted sequentially without any intervening breaks. The Profibus network includes five types of network messages:

- SD1 - a command message encoded as an FC character.
- SD2 - a message containing variable-length data fields.
- SD3 - a message containing data fields of precisely 8 bytes.
- SD4 - a message responsible for transferring the token.
- SD5 - a confirmation message.

II. CONFIGURATION OF THE WORKSTATION ACCORDING TO THE PROFIBUS DP STANDARD

The workstation for simulating the operation of the alarm channel based on the Profibus DP communication protocol consisted of the following devices [3] [7] [8] [9]:

i. Impulse power supply DR-4524 MEAN WELL – 84W/24VDC/2A,
ii. PLC driver Simatic S7-1200 CPU 1214C equipped in PN/E port and additional communication module CM 1241 RS485,
iii. The VIPA/IM0/53DP station is equipped with: PM/DC/24V/10A power supply module with a module allowing connection of a larger number of devices to the power supply, DI 8/DO 8/x24VDC input/output modules, and AI 2x 12bit/0-10V analog input module,
iv. Servodan light intensity sensor.

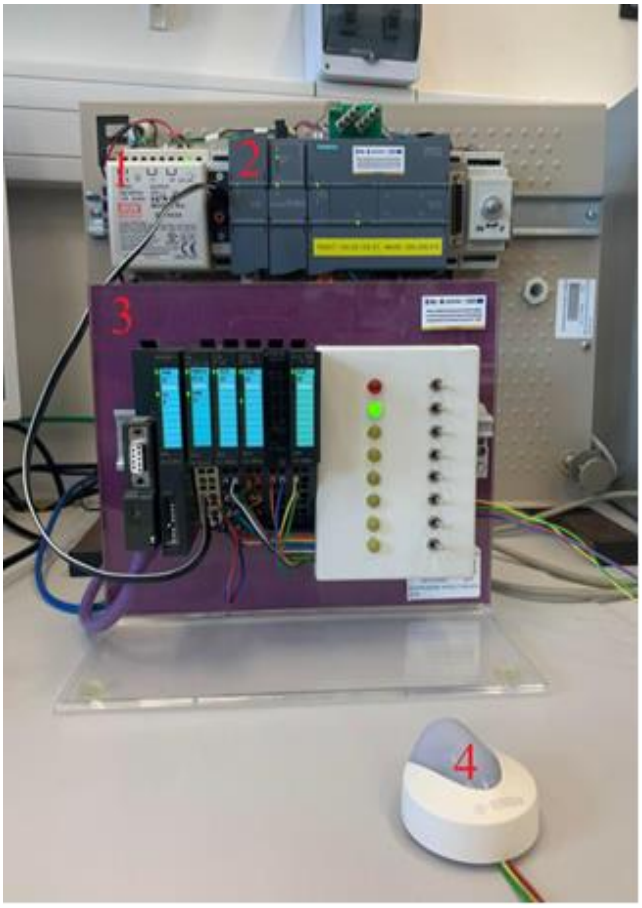

Fig. 2. Workstation Set up According to Profibus DP. Standard

The devices were connected using an RS-485 cable. The network of the implemented system consists of two nodes: a superior node acting as the master of the S7-1200 PLC controller and a subordinate node acting as the slave of the VIPA/IM0/53DP island.

In the network configuration, the following DP addresses were assigned to the devices:

- PLC controller (master) DP - 2
- IO island (slave) DP - 8

The control program for the entire system was written in ladder logic. The master device is waiting for information from the slave regarding any malfunctions. Malfunction signals were generated in two ways: through a digital signal generated by a bistable switch built into the IO module, or through an analog signal generated by a light intensity sensor when it reached a certain value. Once a malfunction occurred, an LED on the master device would start flashing at a frequency of 1 Hz until the malfunction was confirmed and resolved.

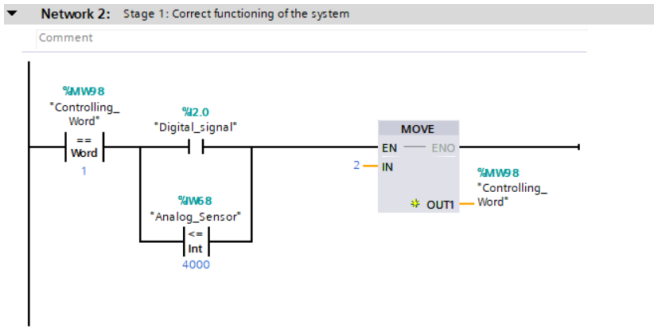

Fig. 3. Screenshot of Part of the Ladder Logic Program

III. DESCRIPTION OF ALARM SYSTEM PROJECT

The project's main objective was to create a distributed alarm system capable of receiving both digital and analog signals indicating equipment failure on a small scale. The sensor, which is connected to the input/output island, is situated a certain distance from the controller. If an issue occurs, it sends a signal to the controller to trigger the alarm. Three of these systems were constructed using communication protocols.

One such protocol is the Profibus DP, which uses a bistable switch located on the input/output island to set off a digital signal indicating failure. Alternatively, an analog signal can be triggered using a light intensity sensor connected directly to the island. The alarm signal is sent to the Programmable Logic Controller, which then confirms the alert.

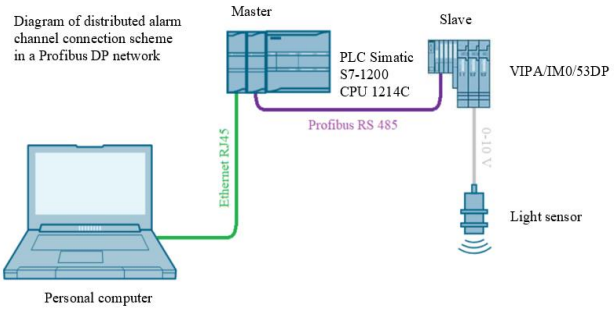

Fig. 4. Diagram of Distributed Alarm Channel Connection Scheme in a Profibus DP Network

IV. CONCLUSION

Setting up a connection via the Profibus DP network is relatively simple and does not require much time. This is because the Profibus bus, like the S7-1214 DC/DC/DC controller equipped with the CM 1241 communication module, was developed by Siemens. The input/output island from Vipa is also compatible with the S7-1200 controller. All configuration is done in a dedicated tab, making the entire configuration process very user-friendly. In addition, the communication uses a serial medium with a D-SUB port, this allows verification of the signal between individual pins.

Retrieval Number: 100.1/ijitee.I993813090824
DOI: 10.35940/ijitee.I9938.13090824
Journal Website: www.ijitee.org

Published By:
Blue Eyes Intelligence Engineering and Sciences Publication (BEIESP)

It is worth noting that the proposal of the completed test configuration can be expanded with additional measuring and actuating elements capable of exchanging data in the Profibus DP standard.

This type of solution is used, among others, in the maritime industry which fits perfectly with the subject matter of Gdynia Maritime University.

DECLARATION STATEMENT

I must verify the accuracy of the following information as the article's author.

- **Conflicts of Interest/ Competing Interests:** Based on my understanding, this article has no conflicts of interest.
- **Funding Support:** This article has not been funded by any organizations or agencies. This independence ensures that the research is conducted with objectivity and without any external influence.
- **Ethical Approval and Consent to Participate:** The content of this article does not necessitate ethical approval or consent to participate with supporting documentation.
- **Data Access Statement and Material Availability:** The adequate resources of this article are publicly accessible.
- **Authors Contributions:** The authorship of this article is contributed solely.

REFERENCES

1. Mamo, Fesseha Tsegaye, Axel Sikora, and Christoph Rathfelder. "Legacy to industry 4.0: A profibus sniffer." Journal of Physics: Conference Series. Vol. 870. No. 1. IOP Publishing, 2017. https://doi.org/10.1088/1742-6596/870/1/012002
2. NOGA, Krystyna Maria; RYBCZAK, Monika; KASPERKIEWICZ, Miłosz. Protokół komunikacyjny Modbus RTU z wykorzystaniem sterownika PLC i układu FPGA–analiza porównawcza. Przegląd Elektrotechniczny, 2021, 97. https://doi.org/10.15199/48.2021.02.22
3. Strona producenta Siemens https://mall.industry.siemens.com/mall/en/WW/Catalog/Products/5000000
4. Seyfettin, Vadi; Ramazan, Bayindir; Yigit, Toplar; Ilhami, Colak. Induction motor control system with a Programmable Logic Controller (PLC) and Profibus communication for industrial plants — An experimental setup. ISA Transactions. Volume 122, March 2022, Pages 459-471 https://doi.org/10.1016/j.isatra.2021.04.019
5. SOLNIK, Włodzimierz; ZAJDA, Zbigniew. Sieć Profibus DP w praktyce przemysłowej: przykłady zastosowań. Wydawnictwo BTC, 2013.
6. Strona Międzynarodowej Komisji Elektrotechniki https://iec.ch/homepage
7. Chawngsangpuii, R., & Das, Dr. P. (2020). Communication Protocol in Internet of Things. In International Journal of Innovative Technology and Exploring Engineering (Vol. 9, Issue 6, pp. 1737–1740). https://doi.org/10.35940/ijitee.f4705.049620
8. Manoj, M. S., Praveen, A. J. P., & Subbulakshmi, K. (2019). Master/Slave Transmitter and Receiver System using Modbus Protocol. In International Journal of Engineering and Advanced Technology (Vol. 8, Issue 6s2, pp. 301–304). https://doi.org/10.35940/ijeat.f1080.0886s219
9. Mahmood, S. S., & Sharma, Dr. P. (2019). Industrial Automation using Zigbee Communication Protocol. In International Journal of Recent Technology and Engineering (IJRTE) (Vol. 8, Issue 3, pp. 7240–7243). https://doi.org/10.35940/ijrte.c6294.098319
10. Chitransh, A., & Kalyan, B. S. (2021). ARM Microcontroller Based Wireless Industrial Automation System. In Indian Journal of Microprocessors and Microcontroller (Vol. 1, Issue 2, pp. 8–11). https://doi.org/10.54105/ijmm.b1705.091221
11. Aliff, M., Hamdi, A. H., Yusof, I., & Samsiah, N. (2019). Development of Control System for Dual NC Machine with Single 6-Axis Robot. In International Journal of Innovative Technology and Exploring Engineering (Vol. 9, Issue 2, pp. 4505–4511). https://doi.org/10.35940/ijitee.b9017.129219

AUTHOR PROFILE

Kacper Falkiewicz. He is a dedicated student of Electrical Engineering, specializing in Computer Control Systems, at the Faculty of Electrical Engineering at the Maritime University in Gdynia. His primary area of study is automation, and he is currently immersed in his engineering thesis on Industry 4.0. This project delves into PLC programming, industrial networks, Excel-based databases, visualization of processes, and the Factory I/O program. His work aims to integrate advanced technologies to enhance manufacturing and industrial processes, reflecting his commitment to contributing to the evolution of modern industry through innovative engineering solutions.